IMPORTANT NOTICE - READ CAREFULLY

120912GRP, 120212GRP

2 HP Grinder Pumps

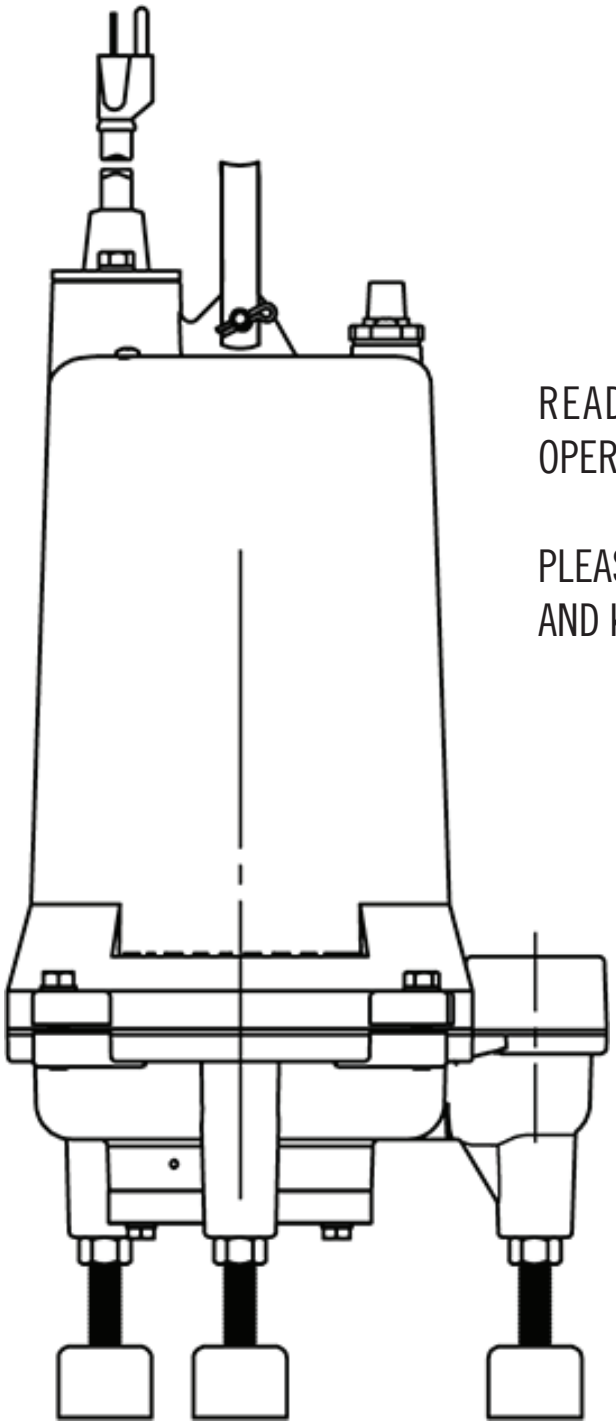

READ ALL INSTRUCTIONS IN THIS MANUAL BEFORE OPERATING PUMP.

PLEASE FILL OUT THE START-UP REPORT ON THE LAST PAGE AND KEEP FOR YOUR RECORDS.

Non-Potable Use Only

SAFETY FIRST

Please read this before installing or operating pump. This information is provided for **SAFETY and to PREVENT EQUIPMENT PROBLEMS**. To help recognize this information, observe the following symbols:

IMPORTANT! Warns about hazards that can result in personal injury or Indicates factors concerned with assembly, installation, operation, or maintenance which could result in damage to the machine or equipment if ignored.

CAUTION! Warns about hazards that can or will cause minor personal injury or property damage if ignored. Used with symbols below.

WARNING! Warns about hazards that can or will cause serious personal injury, death, or major property damage if ignored. Used with symbols below.

Hazardous fluids can cause fire or explosions, burns or death could result.

Biohazard can cause serious personal injury.

Rotating machinery Amputation or severe laceration can result.

Extremely hot - Severe burns can occur on contact.

Hazardous fluids can Hazardous pressure , eruptions or explosions could cause personal Injury or property damage.

Hazardous voltage can shock, burn or cause death.

Only qualified personnel should install, operate and repair pump. Any wiring of pumps should be performed by a qualified electrician.

WARNING! - To reduce risk of electrical shock, pumps and control panels must be properly grounded in accordance with the National Electric Code (NEC) or the Canadian Electrical Code (CEC) and all applicable state, province, local codes and ordinances.

WARNING! - To reduce risk of electrical shock, always disconnect the pump from the power source before handling or servicing. Lock out power and tag.

Prevent large articles of clothing, large amounts of chemicals, other materials or substances such as are uncommon in domestic sewage from entering the system.

During power black-outs, minimize water consumption at the home(s) to prevent sewage from backing up into the house.

Always keep the shut-off valve completely open when system is in operation (unless advised otherwise by the proper authorities). Before removing the pump from the basin, be sure to close the shut-off valve. (This prevents backflow from the pressure sewer.)

Keep the control panel locked or confined to prevent unauthorized access.

If the pump is idle for long periods of time, it is advisable to start the pump occasionally by adding water to the basin.

CAUTION! Pumps build up heat and pressure during operation- allow time for pumps to cool before handling or servicing.

WARNING! - DO NOT pump hazardous materials (flammable, caustic, etc.) unless the pump is specifically designed and designated to handle them.

Do not block or restrict discharge hose, as discharge hose may whip under pressure.

WARNING! - DO NOT wear loose clothing that may become entangled in the impeller or other moving parts.

WARNING! - Keep clear of suction and discharge openings. DO NOT insert fingers in pump with power connected.

Make sure lifting handles are securely fastened each time before lifting. Do not operate pump without safety devices In place. Always replace safety devices that have been removed during service or repair.

Do not exceed manufacturers recommendation for maximum performance, as this could cause the motor to overheat.

Secure the pump in its operating position so it can not tip over, fall or slide.

Cable should be protected at all limes to avoid punctures, cuts, bruises and abrasions - inspect frequently.

Never handle connected power cords with wet hands

To reduce risk of electrical shock, all wiring and junction connections should be made per the NEC or CEC and applicable state or province and local codes. Requirements may vary depending on usage and location.

Submersible Pumps are not approved for use in swimming pools, recreational water installations, decorative fountains or any installation where human contact with the pumped fluid is common.

Do not remove cord and strain relief. Do not connect conduit to pump.

Products returned must be cleaned, sanitized, or decontaminated as necessary prior to shipment, to insure that employees will not be exposed to health hazards in handling said material. All applicable laws and regulations shall apply.

Bronze/brass and bronze/brass fitted pumps may contain lead levels higher than considered safe for potable water systems. Lead is known to cause cancer and birth defects or other reproductive harm. Various government agencies have determined that leaded copper alloys should not be used in potable water applications. For non-leaded copper alloy materials of construction, please contact factory.

IMPORTANT! - A.Y. McDonald Mfg. Co., is not responsible for losses, injury, or death resulting from a failure to observe these safety precautions, misuse or abuse of pumps or equipment

User Guide

Congratulations on your purchase of a A.Y. McDonald Mfg. Co.. With proper care and by following a few simple guidelines, your pump will give you many years of dependable service.

USE & CARE

The A.Y. McDonald Effluent & Sewage pumps are designed to handle routine, domestic effluent & sewage. Solid waste materials should be thrown in the trash. While your station is capable of accepting and pumping a wide range of materials, regulatory agencies advise that the following items should not be introduced into any sewer either directly or through a kitchen waste disposal: glass; metal; diapers; socks, rags or cloth; plastic objects (e.g., toys, utensils, etc.) sanitary napkins or tampons.

In addition you must never introduce into any sewer: Explosives; flammable material; lubricating oil and or grease; strong chemicals; gasoline.

GENERAL INFORMATION

Your home wastewater disposal service is part of a low pressure sewer system. The key element in this system is the grinder pump station. The basin collects all wastewater from the house. The solids in the sewage are then ground to a small size suitable for pumping in the slurry. The grinder pump generates sufficient pressure to pump this slurry from your home to the wastewater plant.

POWER FAILURE

This pump cannot dispose of wastewater or provide an alarm signal without electrical power. If electrical power service is interrupted, keep water usage to a minimum.

WARRANTY

Your pump is furnished with a 3 year from the date of manufacturing warranty against defects in material or workmanship. In addition, your pump must be installed in accordance with the installation instructions. If you have a claim under the provisions of the warranty, contact your installer.

NOTE: ON 120212GRP MODELS, CAPACITOR KIT 6190-021 MUST BE USED OR WARRANTY IS VOID.

For future reference, record the following information:

Pump Model # _____ Pump Serial # _____

Installer _____ Installer Phone # _____

Date Installed _____

RECEIVING / UNPACKING

Upon receiving the pump, it should be inspected for damage or shortages. If damage has occurred, file a claim immediately with the company that delivered the pump. Unpack pump and record pump serial and model number before installing. If the manual is removed from the packaging, do not lose or misplace.

SHORT TERM STORAGE

For best results, pumps can be retained in storage, as factory assembled, in a dry atmosphere with constant temperatures for up to six (6) Months.

LONG TERM STORAGE

Any length of time exceeding six (6) months, but not more than twenty-four (24) months. The units should be stored in a temperature controlled area, a roofed over walled enclosure that provides protection from the elements (rain, snow, wind-blown dust, etc.), and whose temperature can be maintained between +40ºF and +120ºF. If extended high humidity is expected to be a problem, all exposed parts should be inspected before storage and all surfaces that have the paint scratched, damaged, or worn should be recoated with an air dry enamel paint. All surfaces should then be sprayed with a rust-inhibiting oil. Pump should be stored in its original shipping container. On initial start up, rotate shaft by hand to assure seal and motor rotate freely.

User Guide

INSTALLATION

The pump is provided with a leg kit in case a rail lift out system is not used. A minimum of 3" clearance must be maintained between the pump and the basin bottom. If the feet are to be used, install the rubber threaded feet and lock with nut to ensure 3" clearance under pump for proper clearance of solids to enter pump inlet.

Assemble discharge piping or hose assembly to the pump. Discharge piping should be as short as possible. Both a check valve and a shut off valve are required for each pump being used. The check valve is used to prevent backflow into the sump. Excessive backflow can cause flooding and/or damage to the pump. The shut-off valve is used to stop system flow during pump or check valve servicing. If pump is installed with a discharge hose rather than a moveable fitting assembly, make sure the discharge pipe has a 1/8" hole approximately 5" from tend nearest volute and oriented towards the pump body.

ELECTRICAL CONNECTIONS

Breaker Recommendations: **25 AMP** (208V-230V Single Phase): **20AMP** (208V-230V Three Phase): **15AMP** (460V Three Phase). The quick connect cord assembly mounted to the pump must not be modified in any way except for shortening to a specific application. Any supply cables connections between the pump and the control panel must be made in accordance with the National Electric Code or the Canadian Electric Code and all applicable state, province and local electric codes. It is recommended that a junction box, be mounted outside the sump or be of at least Nema 4 (EEMAC-4) construction if located within the wet well. The Ground Wire of pump is marked with an "E" for earth ground and is a Blue-Green Color. **DO NOT USE THE POWER OR CONTROL CABLES TO LIFT PUMP!**

Check winding resistance of pump power cable before installation. The OHM readings should be approximately: Single Phase Models: Black to White or across blades -1.3ohms; Three Phase Models: Black to White – 1.3ohms; Red to White – 3.7ohms; Black to Red – 2.4ohms.

THREE PHASE GRINDER INSTALLATION: Check proper rotation. Improper motor rotation can result in poor pump performance and pump failure. The power leads are the red, black and white wires. There should be approximately an equal ohm resistance between these leads of approximately 1.6ohms for 230 Volt connection and 6.2 ohms for 460Volt. The bluegreen color lead is the ground wire. Once the leads are connected to the power terminals then you are ready to check the rotation. Momentarily apply power to the pump with it laying on its side and impeller clear from obstruction. Observe "kickback" as it should always be in counter-clockwise direction as viewed from top of the motor housing or opposite to impeller rotation. If rotation is incorrect when power is supplied, then reverse two of the leads at the power terminal and try again. This should correct the rotation. Once pump is in operation the amperage of each leg of the power connection should be checked and recorded on the start up sheet. They should be close to the same value for each leg (within 5% of the average leg to leg value). If they are not, try advancing the connections to balance the readings, but do not lose proper rotation.

If additional cord is required, consult a qualified electrician for proper wire size. On single phase models, the type of inwinding overload protector used is referred to as an inherent overheating protector and operates on the combined effect of temperature and current. This means that the overload protector will trip out and shut the pump off if the winding becomes too hot, or the load current passing through them becomes too high. It will then automatically reset and start the pump up after the motor cools to a safe temperature. All three phase models are not automatically protected. They do have on winding thermal sensors accessed through the sensor cord (Black and Green wires) that need to be connected to an approved protection and or alarm circuitry in the panel for winding thermal protection. **Thermal protection shall not be used as a motor overload device. A separate motor overload device must be provided in accordance with NEC codes.** In the event of an overload, the source of this condition should be determined and rectified immediately. DO NOT LET THE PUMP CONTINUE TO RUN IF AN OVERLOAD CONDITION OCCURS. Full load amps are 15 amps for 230 Volt single phase; 17amps for 208 Volt single phase; 11.0, 9.0, & 4.5 amps for 208V, 230V, & 460V three phase models.

OPTIONAL MOISTURE SENSOR A detector is installed in the pump seal chamber which will detect any moisture present. It is recommended that this detector (Black & White wires) be connected in series to an alarm device or the motor starter coil to alert the operator that a moisture detect has occurred. In the event of a moisture detect, check the individual moisture sensor probe leads for continuity and the junction box/control box for moisture content. This situation may induce a false signal in the moisture detecting circuit. Normal resistance between leads is 33,000 OHMS indicating normal connection. When the resistance drops well below 33,000 OHMS, then moisture is present and the pump seals should be serviced. If none of the above tests prove conclusive, the pump(s) should be pulled and the source of the failure identified and repaired. **IF A MOISTURE DETECT HAS OCCURRED, SCHEDULE MAINTENANCE AS SOON AS POSSIBLE.**

SERVICE

Lubrication: Anytime the pump is removed from operation, the cooling oil in the motor housing should be checked visually for oil level and contamination.

Checking Oil: To check oil in the motor housing, set pump upright. Remove plug from motor housing. With a flashlight, visually inspect the oil in the motor housing to make sure it is clean and clear, light amber in color and free from suspended particles. Milky white oil indicates the presence of water. Oil level should be just above the motor when pump is in the vertical position.

Testing Oil: Place pump on it's side, remove plug from motor housing and drain oil into a clean, dry container. Check oil for contamination using an oil tester with a range to 30 Kilovolts breakdown. If oil is found to be clean and uncontaminated (measuring above 15KV. Breakdown), refill the motor housing. (See Replacing Oil below) If oil is found to be dirty or contaminated, the pump must be carefully inspected for leaks at the shaft seals, cord assemblies, O-rings, and plugs before refilling with oil. To locate the leak, perform a pressure test. After leak is repaired, dispose of old oil properly, and refill with new oil.

Replacing Motor Housing Oil: Drain all oil from motor housing and dispose of properly per local and environmental standards. Set unit upright and refill with new cooling oil. Fill to just above motor (approximately 66oz) as an air space must remain in the top of the motor housing to compensate for oil expansion. Apply pipe thread compound to threads on plug and insert and tighten into housing.

Replacing Seal Chamber Oil: Drain all oil from seal chamber and dispose of properly per local and environmental standards. Set unit on its side, with plug upward, and refill with new oil. (approximately 13oz) Apply pipe thread compound to threads on plug and insert and tighten into housing.

WARNING! Do not overfill oil. Over filling of oil can create excessive and dangerous hydraulic pressure which can destroy the pump and create a hazard. Overfilling oil voids warranty.

DIELECTRIC COOLING OIL: BP – Enerpar SE100: Conoco – Pale Paraffin 22; Mobile – D.T.E. Oil Light; G&G Oil – Circulating 22; Imperial Oil – Voltesso-35; Shell Canada – Transformer-10; Texaco – Diala-oil-AX; Woxo – Premium 100.

Pressure Test for pumps that have not been disassembled: If the pump has been disassembled, the oil should be drained before a pressure test. Remove plug from motor housing. Apply pipe sealant to a pressure gauge assembly and tighten into hole. Pressurize motor housing to 10 P.S.I. Use soap solution around the sealed areas and inspect joints for "air bubbles". If, after five minutes, the pressure is holding constant, and no signs of leaks are observed, slowly bleed the pressure and remove the gauge assembly. Replace oil. If the pressure does not hole, then the leak must be located and repaired.

CAUTION! Pressure builds up extremely fast. Too much pressure will damage seal.

Pressure Test for pumps that have not been disassembled: The pressure test may be done with the oil at its normal level. Remove plug from motor housing. Apply pipe sealant to a pressure gauge assembly and tighten into hole. Pressurize motor housing to 10 P.S.I. Use soap solution around the sealed areas above the oil level and inspect joints for "air bubbles". For sealed areas below the oil level, leaks will seep oil. If, after five minutes, the pressure is holding constant, and no signs of leaks are observed, slowly bleed the pressure and remove the gauge assembly. Replace oil. If the pressure does not hole, then the leak must be located and repaired.

Seal Chamber Pressure Test: Set unit on its side with fill plug downward, remove plug and drain all oil from seal chamber. Apply pipe sealant to pressure gauge assembly and tighten into hole in seal plate.

Pressurize seal chamber to 10 P.S.I. and check for leaks as outlined above.

Troubleshooting

CAUTION! Always disconnect the pump from the electrical power source before handling. If the system fails to operate properly, carefully read instructions and perform maintenance recommendations. If operating problems persist, the following chart may be of assistance in identifying and correcting them:

MATCH "CAUSE" NUMBER WITH CORRELATING "CORRECTION" NUMBER.

NOTE: All 3 Phase Models Check Proper Rotation - Cause Low Performance, Noise, and Vibration

NOTE: Not all problems and corrections will apply to each pump model.

PROBLEM	CAUSE	CORRECTION
Pump will not run.	1. Poor electrical connection, blown fuse, tripped breaker or other interruption of power, improper power supply. 2. Motor or switch inoperative (to isolate cause, go to manual operation of pump). 2a. Float movement restricted. 2b. Switch will not activate pump or is defective. 3. Insufficient liquid level.	1. Check all electrical connections for security. Have electrician measure current in motor leads. If current is within +or-20% of locked rotor amps, impeller is probably locked. If current is 0, overload may be tripped. Remove power, allow pump to cool, then re-check current. 2a. Reposition pump or clean basin as required to provide adequate clearance for float. 2b. Disconnect level control. Set ohmmeter for a low range, such as 100 ohms full scale and connect to level control manually and check to see that ohmmeter shows zero ohms for closed switch and full scale for open switch. (Float Switch) 3. Make sure liquid level is at least equal to suggested turn-on point. 4. Re-check all sizing calculations to determine proper pump size. 5. Check discharge line for restrictions, including ice if line passes through or into cold areas. 6. Remove and examine check valve for proper installation and freedom of operation. 7. Open valve. 8. Check cutter for freedom of operation, security and condition. Clean cutter and inlet of any obstruction. 9. Loosen union slightly to allow trapped air to escape. Verify that turn-off level of switch is set so that the suction is always flooded. Clean vent hole. 10. Remove & examine for damage. Replace pump stator if required. 11. Repair fixtures as required to eliminate leakage. 12. Check pump temperature limits & fluid temperature. 13. Replace portion of discharge pipe with flexible connector. 14. Turn to automatic position. 15. Check for leaks around basin inlet and outlets.
Pump will not turn off.	2a. Float movement restricted. 2b. Switch will not activate pump or is defective. 4. Excessive inflow or pump not properly sized for application. 9. Pump may be air locked. 14. H-O-A switch on panel is in "Hand" position.	
Pump hums but does not run.	1. Incorrect voltage. 8. Cutter jammed or loose on shaft, worn or damaged, inlet plugged.	
Pump delivers insufficient capacity.	1. Incorrect voltage. 4. Excessive inflow or pump not properly sized for application. 5. Discharge restricted. 6. Check valve stuck closed or installed backwards. 7. Shut-off valve closed. 8. Cutter jammed or loose on shaft, worn or damaged, inlet plugged. 9. Pump may be airlocked. 10. Pump stator damaged / torn.	
Pump cycles too frequently or runs periodically when fixtures are not in use.	6. Check valve stuck closed or installed backwards. 11. Fixtures are leaking. 15. Ground water is entering basin.	
Pump shuts off and turns on independent of switch, (trips thermal overload protector). **CAUTION:** Pump may start unexpectedly. Disconnect power supply.	1. Incorrect voltage. 4. Excessive inflow or pump not properly sized for application. 8. Cutter jammed, loose on shaft, worn or damaged, inlet plugged. 12. Excessive water temperature.	
Pump operates noisily or vibrates excessively.	4. Operating at too high / low of pressure . 5. Discharge restricted. 8. Cutter broken. 13. Piping attachments to building structure too rigid or too loose.	

2 HP Grinder Pumps

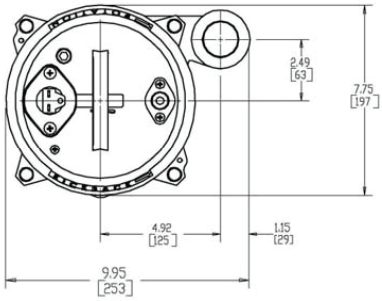

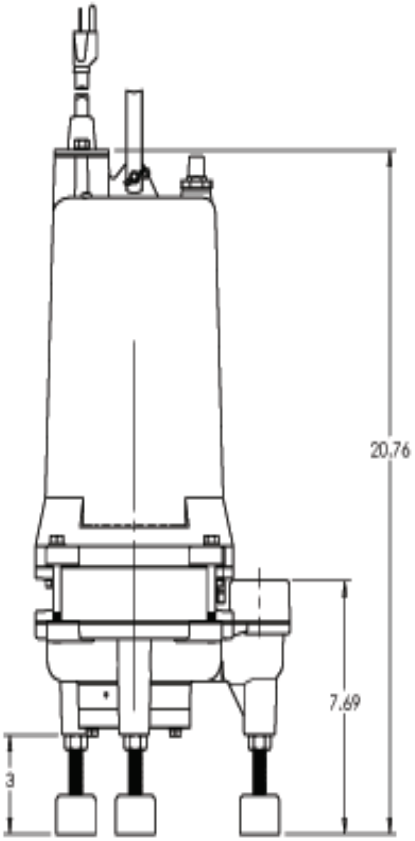

PART	CONSTRUCTION / SIZE
DISCHARGE	1 1/4” NPT Vertical
SOLIDS HANDLING	3”
LIQUID TEMP.	150ºF. INTERMITTENT
MOTOR HOUSING	CAST IRON
VOLUTE	CAST IRON
SEAL PLATE	CAST IRON
IMPELLER	CAST IRON
SHAFT	416 STAINLESS STEEL
WEIGHT	85 LBS MANUAL (DOUBLE SEAL) 75 LBS MANUAL (SINGLE SEAL)
MOTOR	3450 RPM, 60 HZ, NEMA L (1 PHASE)

INCLUDES OVERLOAD PROTECTION IN THE MOTOR, OIL FILLED, CLASS F INSULATION

CAPACITOR START / CAPACITOR RUN

PART	CONSTRUCTION / SIZE
SHAFT SEAL (SINGLE SEAL)	CARBON - CERAMIC BUNA-N-ELASTOMER 300 SERIES STAINLESS STEEL
SHAFT SEAL (DOUBLE SEAL)	TANDEM DOUBLE MECHANICAL UPPER / CARBON - CERAMIC LOWER / SILICON CARBIDE-SILICON CARBIDE BUNA-N- ELASTOMER 300 SERIES STAINLESS STEEL
BEARING (UPPER & LOWER)	SINGLE ROW, BALL, OIL LUBRICATED
HARDWARE	316 SERIES STAINLESS STEEL
O-RINGS	BUNA-N
CORD ENTRY	QUICK DISCONNECT PIN TERMINALS
CORD	20’ LENGTH STANDARD

Start-Up Report

Please fill out the following questions as completely and accurately as possible for your own records.

Pump Owner's Name: _____

Address: _____

Location of installation: _____

Phone: _____

Purchased from: _____

Pump Model _____ Serial # _____ Date Code _____

NOTE: 120212GRP MODELS MUST HAVE CAPACITOR KIT 6190-021 OR WARRANTY IS VOID.

Date Installed: _____

Does impeller turn freely by hand? YES _____ NO _____

Condition of cord jacket? Good _____ Fair _____ Poor _____

Was equipment stored?_____ How long? _____

Liquid being pumped _____

Debris in bottom of station? _____ Was debris removed in your presence? _____

Discharge pipe size?_____Length of pipe? _____Static lift?_____

Does station appear to operate at the proper rate?_____Pump down time?_____

Voltage at wiring terminal L1-L2 _____ L2-L3_____ L1-L3_____

Run Amps L1 _____L2 _____ L3_____

3 Phase Models - Check Proper Rotation? Yes / No

Difficulties during start up:

_____

_____

_____

_____

I certify this report to be accurate (start up person) _____

Date: _____

WITHOUT YOU THERE IS NO US.

4800 Chavenelle Road | Dubuque, IA 52002
1-800-AY-CARES | aymcdonald.com | aymcdonaldu.com
(292-2737)